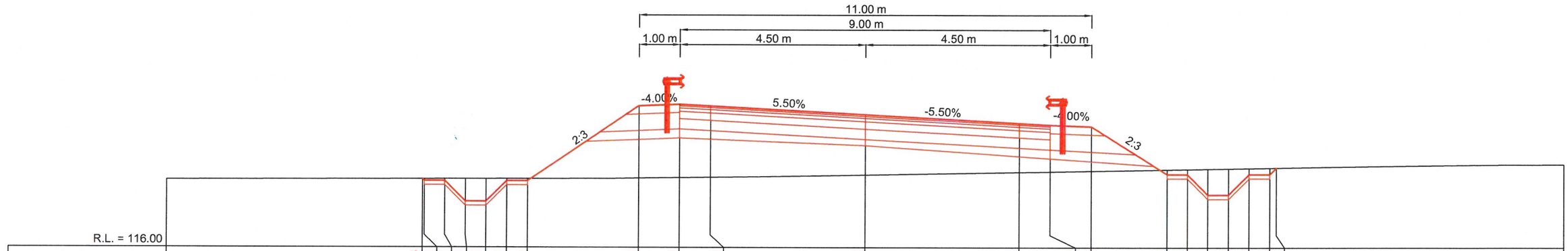
11.00 m
9.00 m
1.00 m
4.50 m
4.50 m
1.00 m
-4.00%
5.50%
-5.50%
-4.00%
2:3
2:3
R.L. = 116.00

| | | |